Modelling and Simulation of Static Var Compensator with Matlab

BOUDJELLA.Houari
F.Z. Gherbi, S. Hadjeri and F. Ghezal
Laboratory of Intelligent Control and Electrical Power System
Department of electrical engineering, Faculty of sciences and engineering
Djillali Liabes University, Sidi Bel Abbes, Algeria.
boudj_h@yahoo.fr

***Abstract*- This paper presents the modelling and simulation of Static Var Compensator (SVC) in power system studies by MATLAB. SVC is a shunt device of the Flexible AC Transmission Systems (FACTS) family using power electronics to control power flow and improve transient stability on power grids. In the first step, we have modelled mathematically with MathCAD how to analyze the rating of SVC.**

In second step, we have conferred modelling of SVC in power system to analyze its behaviour operating with in control range and outside of control range and how to perform power system studies which is anchored with load flow analysis for SVC realization.

In the third step, we have been modelling separately the SVC transfer functions with open control loop in the respective control elements: measuring module, thyristor susceptance control module and voltage regulator module, and we have used lag/led compensators theories to configure open and close loop transfer function with respective gain/phase margin. at the end oneself is going to see the effect of renting of a svc on the transmission line

I. INTRODUCTION

The SVC has been used for reactive power compensation since the mid 1970, firstly for arc furnace flicker compensation and then in power transmission systems. One of the first 40 Mvar SVC was installed at the Shannon Substation of the Minnesota Power and Light system in 1978. The SVC results in the following benefits:

- Voltage support, and regulation,
- Transient stability improvement, and
- Power system oscillation damping,
- Reactive power compensation,
- Power transfer capacity increase and line loss minimization.

Controlled reactive compensation in electric power system is usually achieved with the following configuration corridors.Thyristor Controlled reactor (TCR), fixed capacitor (FC), Thyristor switched capacitor/reactor (TSC/TSR) and mechanical switched capacitor/reactor SVC. Here, we are discussing TCR/TSR SVC combination and your control system show in Fig.1.

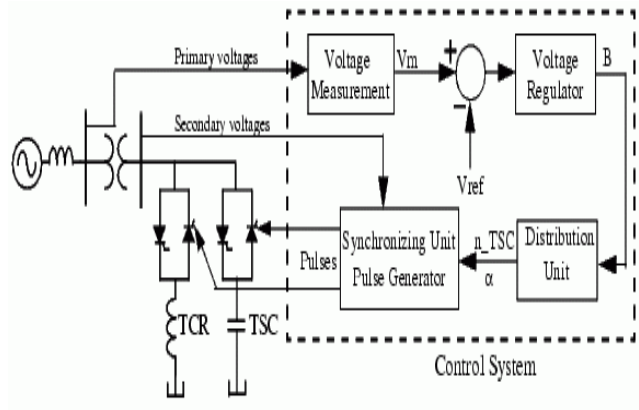

Fig. 1. Single-line Diagram of an SVC and Its Control system

The output of the compensator is controlled in steps by sequentially switching of TCRs and TSCs. By stepwise switching of reactors rather than continuous control, the need for harmonics filtering as part of the compensator scheme is eliminated.

II. SVC MATHEMATICAL MODEL WITH MATHCAD

The following example shows how the parameters of the SVC can be determined. Assume the SVC comprising of one 109-Mvar TCR bank and three 94-Mvar TSC banks connected to the 735 kV bus via a 333- MVA, 735/16-kV transformer on the secondary side with X_k = 15%. The voltage droop of the regulator is 0.01pu/100VA (0.03pu/300 VA). When the SVC operating point changes from fully capacitive to fully inductive, the SVC voltage varies between 1-0.03=0.97pu and 1+0.01=1.01 pu. The SVC rating is as follows:

$Q_{TSC} = 3.\ 94\,\text{Mvar}$,
$Q_{TCR} = 109\,\text{Mvar}$,

a) At rated line-to-line voltage U_{rated}, the nominal inductive and capacitif currents of SVC referred to primary side are determined as follows:

$$Q_{\text{L rated}} = \sqrt{3}U_{rated}.I_{L\,rated} = U_{rated}^2.B_{Lrated} \quad (1)$$

$$I_{Lrated} = \frac{Q_{Lrated}}{\sqrt{3}U_{rated}} = \frac{Q_{3TSC} - Q_{TCR}}{\sqrt{3}U_{rated}} = 135.89A$$

$$Q_{C\,rated} = \sqrt{3}U_{rated}.I_{C\,rated} = U^2_{rated}.B_{C\,rated}$$

$$I_{C\,rated} = \frac{Q_{C\,rated}}{\sqrt{3}\,U_{rated}} = \frac{Q_{3\,TSC}}{\sqrt{3}\,U_{rated}} = 221.51\,A$$

b) At the maximum line-to-line voltage Umax= 742.35 kV

$$Q_{L\max} = \sqrt{3}U_{\max}.I_{L\max} = U^2_{\max}.B_{Lrated}$$

$$I_{L\max} = I_{L\,rated}\frac{U_{\max}}{U_{rated}} = 137.24A \quad (3)$$

c) At the minimum line-to-line voltage U_{min} = 712.95 kV

$$Q_{C\min} = \sqrt{3}U_{\min}.I_{C\min} = U^2_{\min}.B_{C\,rated}$$

$$I_{C\min} = I_{C\,rated}\frac{U_{\min}}{U_{rated}} = 214.86A$$

d) The reactive of the TCR and TSC are calculated as

$$X_{L\,rated} = \frac{U^2_{rated\,S}}{Q_{L\,rated}} = \frac{16^2}{109} = 2.348\,\Omega$$

(4)

$$X_{transf} = 0.15.\frac{U^2_{rated}}{P_{trans}} = \frac{16^2}{333} = 0.115\,\Omega$$

$$X_{L\,TCR}(\Delta) = X_{L\,rated} - X_{transf} = 2.233\,\Omega \quad (5)$$

$$X_{L\,TCR}(1\Phi) = 3.\ 2.233 = 6.67\,\Omega$$

$$L_{L\,TCR} = \frac{6.67}{2.\pi.60} = 17.7\,mH$$

$$X_{C\,rated} = \frac{U^2_{rated}}{Q_{C\,rated}} = \frac{16^2}{282} = 0.9078\ \Omega \quad (6)$$

$$C = \frac{1}{2.\pi.60.0.9078} = 2.92\,mF$$

III. SVC V-I CHARACTERISTICS

The steady-state and dynamic characteristics of SVCs describe the variation of SVC bus voltage with SVC current or reactive power, Fig.2 illustrates the terminal voltage-SVC current characteristic with specific slope.

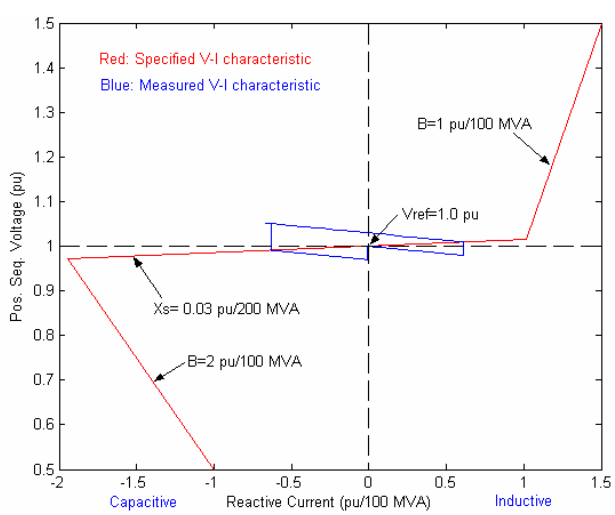

Fig. 2. SVC steady-state control characteristics.

$$\text{Slope} = \frac{\Delta V_{C\max}}{I_{C\max}} = \frac{\Delta V_{L\max}}{I_{L\max}} \quad (7)$$

The regulation slope allows:

- To extend the linear operating range of the compensator
- To improve the stability of the voltage regulation loop.
- To ensator as well as other voltage regulation devices.

The V-I characteristic is described by the following three equations:

$V = V_{ref} + X_S.I$ SVC is in regulation range $-B_{Cma} < B > B_{Lmax}$

$V = \frac{I}{-B_{C\max}}$ SVC is fully capacitive $B = B_{C\max}$

$V = \frac{I}{B_{L\max}}$ SVC is fully inductive $B = B_{L\max}$

IV. MODELING OF STATIC VAR COMPENSATOR IN POWER SYSTEM STUDIES

SVC application studies require appropriate power system models and study methods covering the particular problems to be solved by the SVC application. The following studies normally are required for an SVC application from the early planning stage till operation.

- Load flow studies.
- Small and large disturbance studies.
- Harmonic studies.
- Electromagnetic transients studies.
- Fault studies.

A. *Model for load flow analysis*

The main objective of load flow analyses is to determine the node voltages reactive and active power flow in the network branches, generations and loss. The power flow studies related to SVC applications are:

- determine the location and preliminary rating of the SVC
- To render information on the effects of the SVC on the system voltages and power flows.
- To provide the initial condition for system transient analysis.
- And operating boundaries likewise inside or outside control range.

B. *SVC operating within the control range*

The control range of the SVC is define as $I_{\min} \langle I_{SVC} \langle I_{\max}$ ..... $V_{\min} \langle V \langle V_{\max}$ in this range, SVC is represented as a PV-node (generator node) at an auxiliary bus with P=0, V =Vref. A reactance of equivalent to the slope the V-I characteristics is added between the auxiliary node and the node of coupling to the system. The node at the point of common coupling is a PQ node with P=0, Q=0, as show in Fig.3:

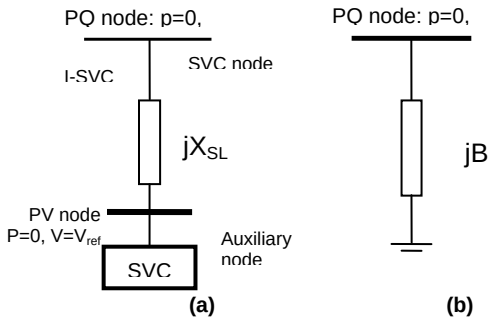

Fig.3. SVC model for operation within the control range (a) and operation outside the control range (b)

V. SVC CONTROL TRANSFER FUNCTION MODELED BY MATLAB

The SVC modeling comprises of following elements:

- The voltage and current measuring (and filtering) circuit.
- A regulator including possible additional signals fed to the reference point.
- Additional control signals are used for system damping improvement.
- A distribution unit.
- A model of the thyristor susceptance control module.
- A model of the interface with the power system.

A. *Measuring module*

In SVC model, the characteristics of the measuring and filter circuit can be approximated by transfer function as given below:

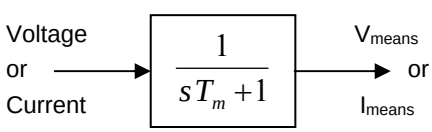

The measuring circuit time constant is 0.001-0.005s

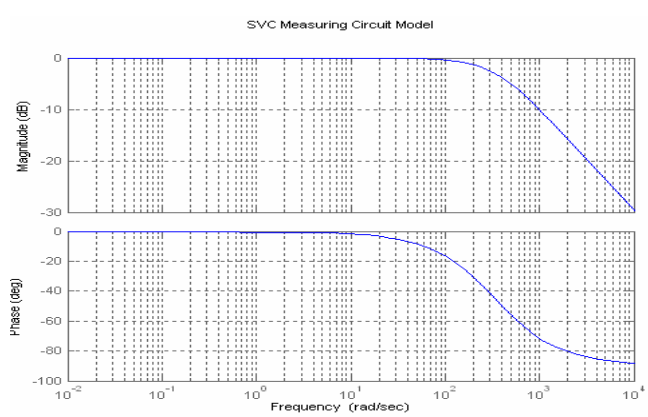

Fig. 4. Measuring model

B. *Voltage regulator model*

This is integral type of voltage control model, in other words this lag compensator for voltage control.

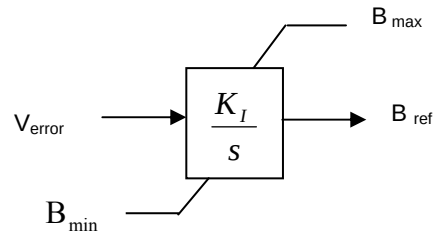

For this example Ki = 300.

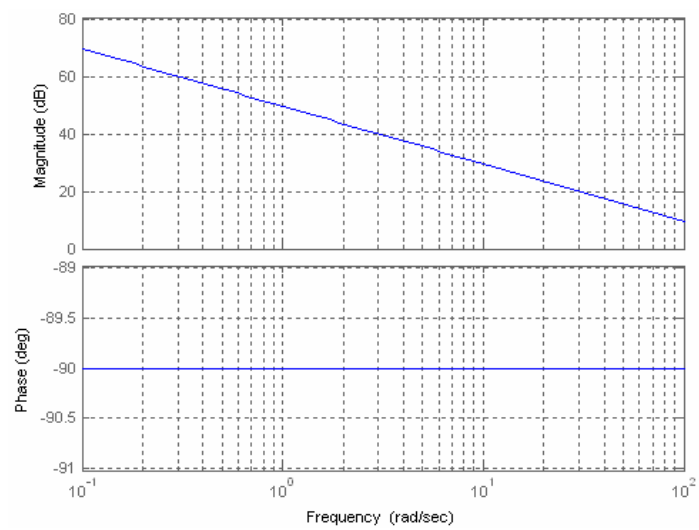

Fig. 5. Voltage Regulator Model integral type

C. *Thyristor s usceptance control model*

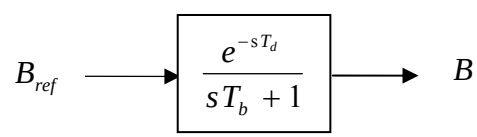

T_d is the gating delay or (dead time) is neglected as it is very small (≈ 1/12 th cycle of the fundamental) and Tb is the effect of thyristors firing sequence control.

The compensator susceptance, B_{SVC} is given by:

$$B_{SVC} \quad \frac{B_0 \ (B_{TSC} + B_{TCR})}{B_0 + B_{TSC} + B_{TCR}} \tag{8}$$

Where B_0 is the susceptance of the transformer.

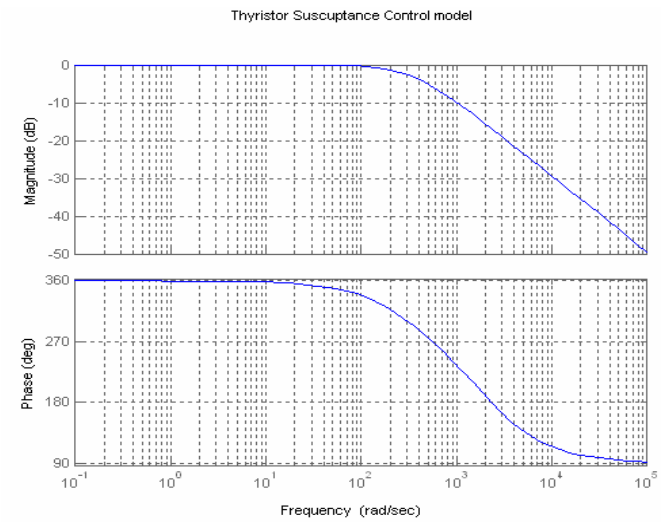

Fig. 6. Susceptance control model

D. *Distribution unit module*

The function of a distribution module is to determine the number of TSC units and the level of TCR reactive power absorption (or a combination of both) based on the required reactive power. For SVC with continuous output, there is not a need to model this module. Fig.7 shows a distribution model for TSR-TSC SVCs.

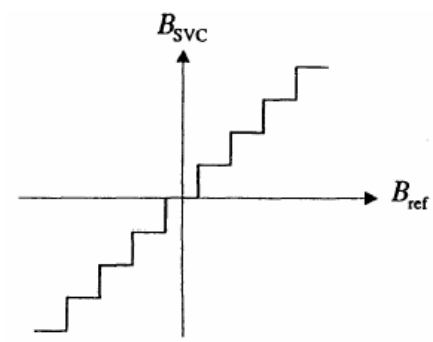

Fig. 7. Distribution unit model for TSR-TSC TYPE SVC

VI. TYPICAL PARAMETERS FOR SVC MODELS

The parameters of the SVC have to be selected to SVC rating and performance criteria taking into account the power system behavior under various operating conditions. To improve SVC strategic operation these parameters are viable.

Table 1. Typical parameters for SVC model

Module	Parameter	Definition	Typical value
Measuring	T_m	For time constant	0.001-0.005s
Thyristor Control	T_d T_b	Gating delay Firing delay	0.001s 0.003-0.006s
Voltage regulator	K_i	Integrator gain	K_i can be adjusted
Slope	X_{sl}	Steady-state error	0.01-0.05 p.u

VII. SIMPLIFIED TRANSFER CONTROL FUNCTION OF SVC

The system stability studies narrate how to get the substantial results by means of SVC to stabilize system voltages. For this situation the power system is represented by a source voltage in series with an equivalent system reactance Xe in p.u. Fig.8 show a simplified block diagram of the SVC with closed-lope terminal voltage control.

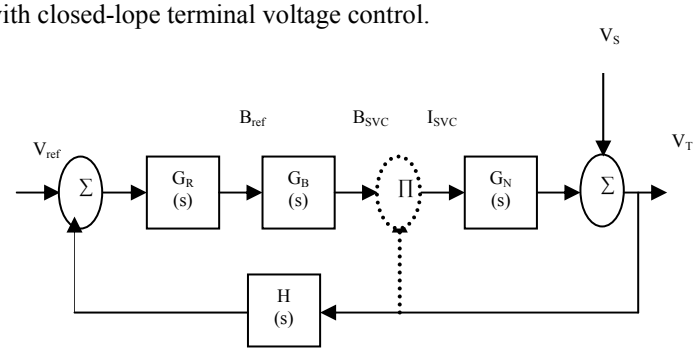

Fig. 8. Simplified block diagram of SVC

In the simplified model:

$H(s) = \dfrac{1}{1+sT_m}$: transfer function of the voltage measuring device.

$G_R(s) = \dfrac{K_{SL}}{1+sT}$: transfer function of voltage regulator and slope unit.

$G_B(s) = \dfrac{1}{1+sT_d}$: transfer function of the compensator main circuit.

$G_N(s) = X_e$: transfer function of the network.

The slope of the steady-state characteristics is related to transfer function gain $K_{SL} = \dfrac{1}{X_{SL}}$

For simplified model, we have:

$$\Delta V_T(s) = \frac{G_R(s)G_B(s)G_N(s)}{1+G_R(s)G_B(s)G_N(s)H(s)}\Delta V_{ref}(s) + \frac{1}{1+G_R(s)G_B(s)G_N(s)H(s)}\Delta V_s(s) \quad (9)$$

A. *SVC MODEL EXAMPLE*

This example shows how to control SVC model for determination of the SVC node voltage variation due to a small disturbance.

Q_{rated}=180 Mvar, power system S_C= 1800 MVA, X_{SL}= 2%.
T_m=0.003s, T=0.02s, T_d = 0.001s

A.1. *SVC PLANT DESIGNING*

Effect of voltage regulation and slope with transfer function:

$$G_R(s) = \frac{K_{SL}}{1+sT}$$

$$K_{SL} = \frac{1}{X_{SL}} = 50 \ p.u.$$

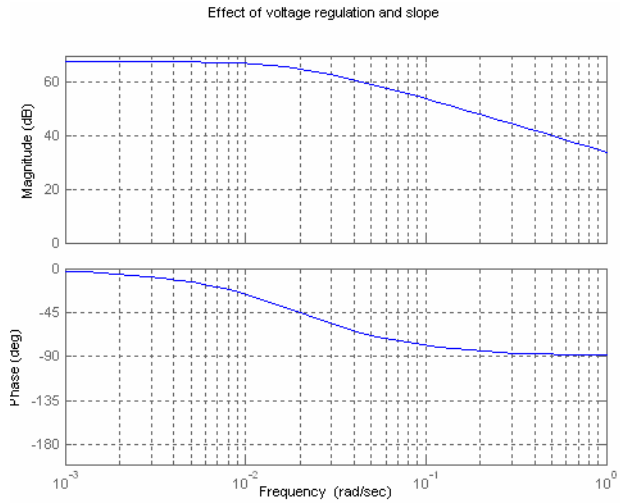

Fig. 9. Effect of voltage regulation and slope

SVC transfer function of voltage measuring device outcomes $H(s) = \frac{1}{1+sT_m}$ is given by Fig.4.

A.2. SVC CONTROL COMPENSATOR DESIGNING

Transfer function of the compensator main

$$G_B(s) = \frac{1}{1+sT_d}$$

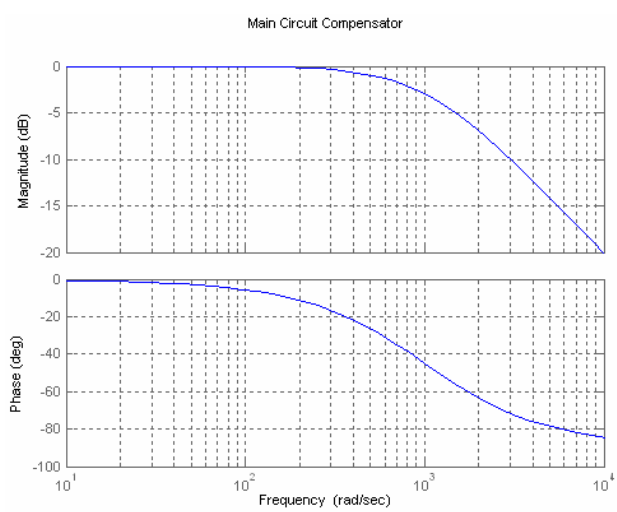

Fig. 10. Compensator main circuit

On the base of SVC rating, we have:

$$X_e = \frac{Q_{rated}}{S_C} = \frac{180}{1800} = 0.1 \ p.u. \quad (10)$$

Suppose that the $\Delta V_{ref} = 0$ the response of the system to a step-like voltage ΔV_s is formulated as:

$$\frac{\Delta V_T(s)}{\Delta V_S(s)} = \frac{1}{1+G_R(s)G_B(s)G_N(s)H(s)} \quad (11)$$

In the steady-state $(s \to 0)$:

$$E_{ss(s\to 0)} = \frac{\Delta V_T(s)}{\Delta V_S(s)} = \frac{1}{1+X_{SL}X_e} = \frac{1}{1+50\times 0.1} = 0.17 \quad (12)$$

This means that the variation of voltage in the SVC node is equivalent to 17% of the variation of the source voltage.

VIII. LOCATION OF AN SVC

Location of an SVC strongly affects controllability of the swing modes. In general the best location is at a point where voltage swings are greatest. Normally, the mid-point of a transmission line between the two areas is a good candidate for placement.

IX. PRINCIPLE OF SVC OPERATION

Thyristor Controlled Reactor (TCR): is a fixed reactor in series with bidirectional thyristor valve. The amplitude of the TCR current can be changed continuously by varying the thyristor firing angle from 90° to 180°. The TCR firing angle can be fully changed within one cycle of the fundamental frequency, thus providing smooth and fast control of reactive power supply to the system.

Thyristor Switched Capacitor (TSC): comprises of a capacitor in series with bidirectional thyristor valve and a damping reactor, used to switch on and off the capacitor bank. The TSC can operate in coordination with the TCR so that the sum of the reactive power from the TSC and the TCR becomes linear.

X. EFFECT OF AN SVC LOCATION IN TRANSMISSION LINE

We take the example of the paragraph (§.2), after simulation by Matlab, we have obtained:

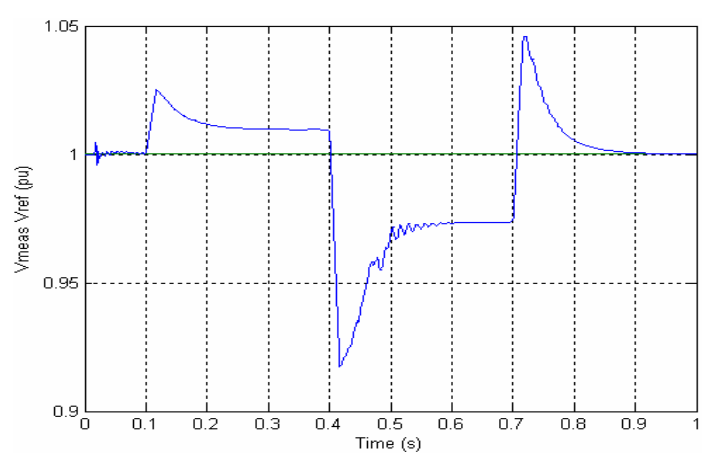

Fig. 11. Voltage variation in transmission line

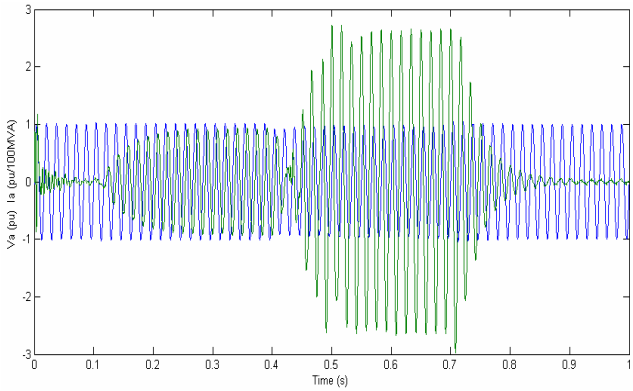

Fig. 12. Voltage and Current of positive sequence

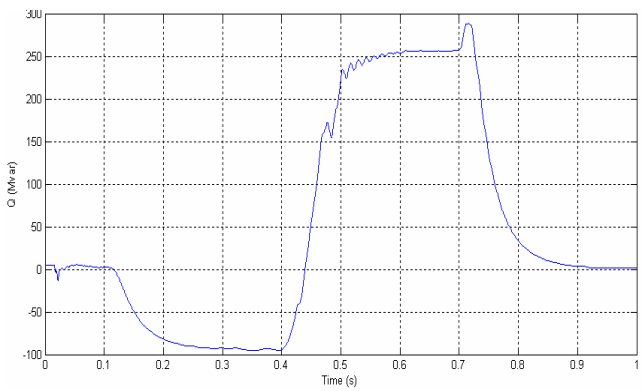

Fig. 13. Power reactive absorbed and injected by SVC

Initially the source generate the nominal voltage; the voltage of the line is steady (V_{ref} = 1pu). At t=0.117s the voltage on the line increases successively until has than it to reach 1.025pu, at this moment the SVC goes intervene. The TCR absorbs the reactive power transmitted on the line, the voltage decreases until has 0.917 been able to have t=0.417s, in himself case the TSC generates the reactive power progressively, the voltage increase to reach 1.046pu at t=0.719s. And finally returned to nominal voltage (1pu at t = 0.94s).

XI. CONCLUSION

In this article, we have modeled the small disturbances including control action, resulting in the determination of the required rating of SVC for the given subject matter. Furthermore, it has also determined the appropriate control signal for adequate transient stability as well as control structures corridors to give most viable and composite perception of the SVC control system.

Therefore, the power system stability describes the voltage control at the point of SVC connection to the system. This technique may be used to verify the adequacy of the control parameters. At the end, we have introducing an SVC in transmission line, and observe their influence on the voltage, current and variation of reactive power in line transmission.

ACKNOWLEDGMENT

Ic	Capacitive Current	A
I_L	Inductive Current	A
Q_{TCR}	Reactive power of TCR	Mvar
Q_{TSC}	Reactive power of TSC	Mvar
X_{SL}	Slope reactance	p.u
SVC	Static Var Compensator	
TCR	Thyristor Controlled Reactor	
TSC	Thyristor Switched	

REFERENCES

[1] Xiao-Ping Zhang, Christian Rehtanz, Bikash Pal. "Flexible AC Transmission Systems: Modeling and Control" New York 2006.
[2] Vijay K. Sood "HVDC and FACTS Controllers, Application of Static Converters in Power Systems"
[3] Enrique Acha, Claudio R. Fuerte-Esquivel, Hugo Ambriz-Perez, cesar Angeles-Camacho "FACTS Modeling and simulation in Power system Networks" John Wiley & Sons Ltd 2004.
[4] E. Acha, V.G. Agelidis, O. Anaya-Lara, T.J.E. Miller "Power Electronic Control in Electrical Systems" 2002.
[5] X. Wei, J.H. Chow, B.Fardanesh, A.A. Edris, "A Dispatch Strategy for Interline Power Flow Controller Operating at rated Capacity" IEEE Power System Conf and Expos, 2004.
[6] Chi-Jui Wu, Ching-Jang Wu, "Voltage profile correction of a load bus by static reactive power compensators with contization controllers" Electric Power Systems Research, PP 47-58, 1992.
[7] C.E.Lin, T.C. Chen, C.L.Huang, "Optimal control of a static var compensator for minimization of line loss", Electric Power Systems Research, PP 51-61, 1988.
[8] Pramod Pariha, George G. Karady, "Characterization of a thyristor controlled reactor", Electric Power Systems Research, PP 141-149, 1997.
[9] Walid Hubbi, Takashi Hiyama, "Placement of static var compensator to minimize power system losses", Electric Power Systems Research, PP 95-99, 1998.
[10] Modelling of SVC for stability evaluation using structure preserving energiy function, Departement of Electrical Engineering, Indian Institute of Science, Bangalore 560012, India.